CRYSTORAMA LIGHTING

Crystorama.com

ASSEMBLY INSTRUCTION MODEL#2262-PN

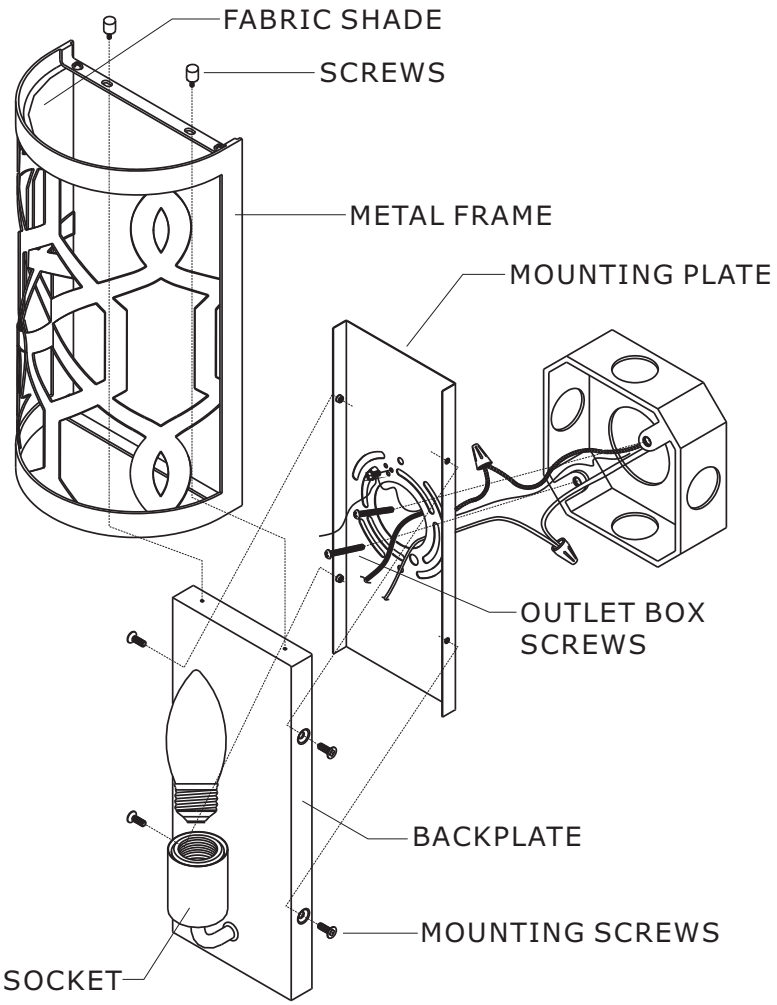

WARNING:



Electrical Danger Turn Power off

All electrical components must be installed by a licensed electrician in accordance with the National Electric Code and the appropriate local electrical codes.

CERTIFIED

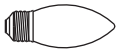

You will need 1-Medium Base Bulb

40 Watts Recommended 60 Watts Max.

For Type B bulb only

USE LED BULBS FOR EXTENDED USE

This fixture is Dry rated

How to install

1. Install the mounting plate to the outlet box using two outlet box screws.
2. Connect fixture wires to supply wires in outlet box.
3. Install backplate onto the mounting plate, and secure with the mounting screws.
4. Install the bulb(not included) into the socket.
5. Install metal frame onto the backplate, and secure with the screws.

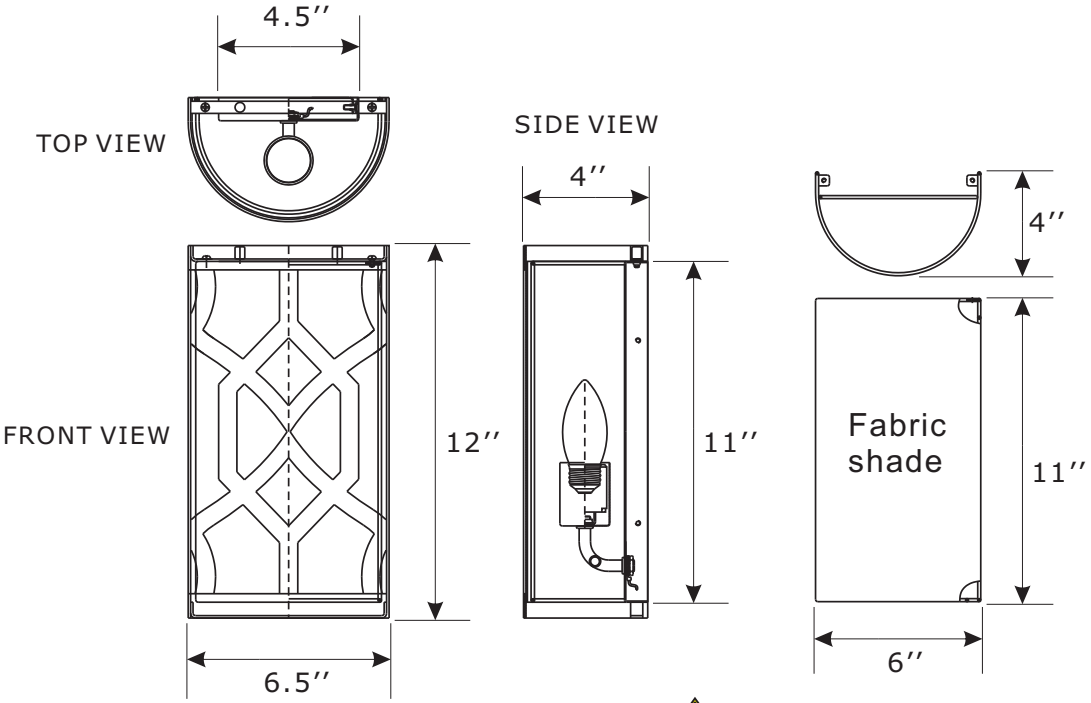

WARNING: This product can expose you to Lead which is known to the state of California to cause cancer and/or birth defects or reproductive harm. For more information go to www.P65Warnings.ca.gov

CRYSTORAMA LIGHTING

Crystorama.com

PART NUMBER MODEL#2262-PN

Part Number

Part Numbers

A. (1)-Mounting hardware
B. (1)-Mounting plate
C. (1)-Backplate L11''xW4-1/2''xH3/4'' #XRF2262PNBKP11IN
D. (4)-Mounting screw
E. (1)-Fabric shade L11''xW6''xH3-7/8'' #XRF2262SHA11IN
F. (2)-Screw
G. (1)-Metal frame

