CRYSTORAMA LIGHTING

Crystorama.com

ASSEMBLY INSTRUCTION MODEL# ADD-300-AG-AU

For Pendant

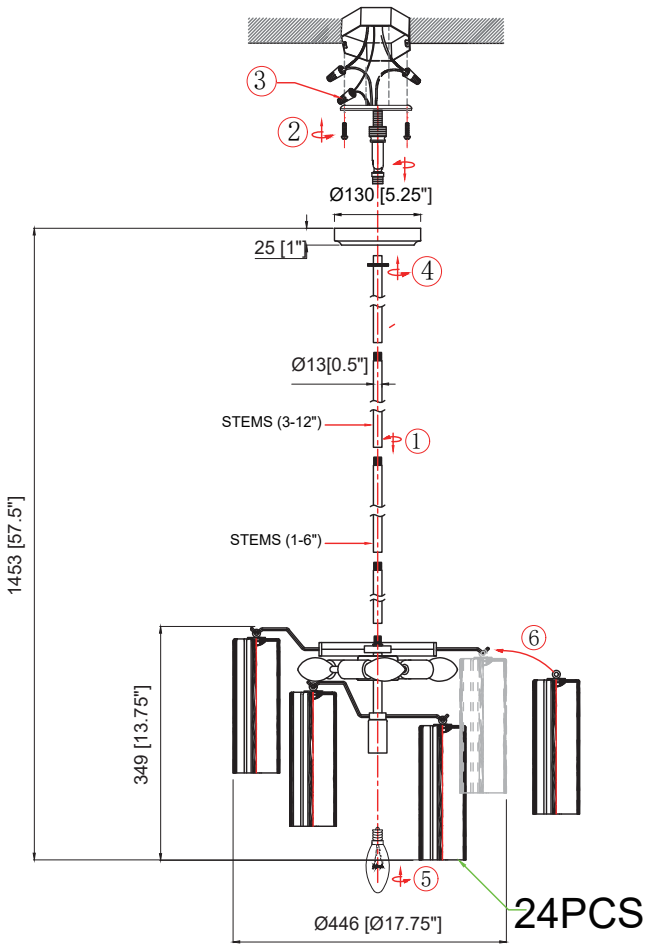

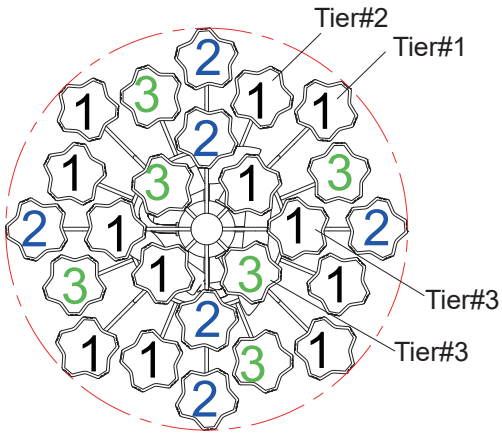

Glass Installation Diagram

WARNING:

Electrical Danger Turn Power off

All electrical components must be installed by a licensed electrician in accordance with the National Electric Code and the appropriate local electrical codes.

Intertek

You will need 4 Candelabra Base Bulb
40 Watts Recommended 60 Watts Max.
USE LED BULBS FOR EXTENDED USE
This fixture is Dry rated

How to Install

1. Decide the preferred hanging height and choose the correct length of rods needed.
2. Feed the wires through the rods,screw collar ring and canopy(with a bigger center hole). Screw the rods together. Screw one end of the rod assembly onto the top of frame and the other end onto the swivel on the mounting strap
3. Attach the mounting strap onto the outlet box.
4. Raise the fixture up to the ceiling and do the wire connections are made. Slip the canopy up along the rods and over the mounting strap. Secure with the screw collar ring.
5. Install the bulb into the socket.
6. Dress the glass as illustrated.

Glass Sets

1. 12 pcs Clear glass(D2.75 x H7.75")
2. 6 pcs Amber glass(D2.75 x H7.75")
3. 6 pcs Smoke glass(D2.75 x H7.75")

⚠ WARNING: This product can expose you to Lead which is known to the state of California to cause cancer and/or birth defects or reproductive harm. For more information go to www.P65Warnings.ca.gov

CRYSTORAMA LIGHTING

Crystorama.com

ASSEMBLY INSTRUCTION MODEL# ADD-300-AG-AU

For Ceiling

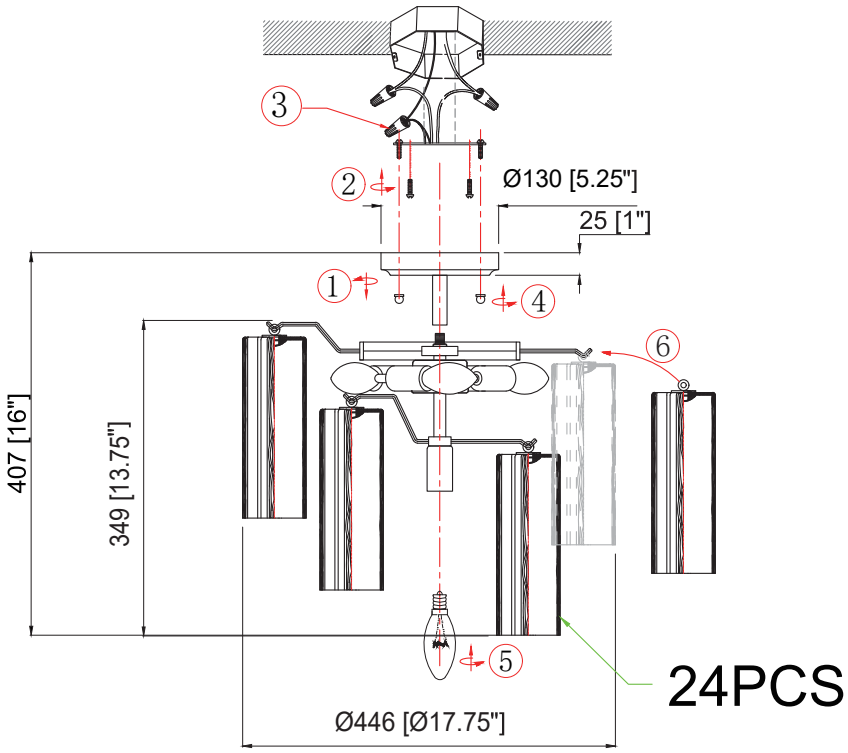

WARNING:

Electrical Danger — Turn Power off

All electrical components must be installed by a licensed electrician in accordance with the National Electric Code and the appropriate local electrical codes.

Intertek

You will need 4 Candelabra Base Bulb
40 Watts Recommended 60 Watts Max.
USE LED BULBS FOR EXTENDED USE
This fixture is Dry rated

How to Install

1. Screw the canopy kit(with a smaller center hole) onto the frame.
2. Attach the mounting strap onto the outlet box.
3. Raise the fixture up to the ceiling and over the mounting strap. When the wire connection is made,secure the canopy with two ball nuts.
4. Install the bulb into the socket.
5. Dress the glass as illustrated.

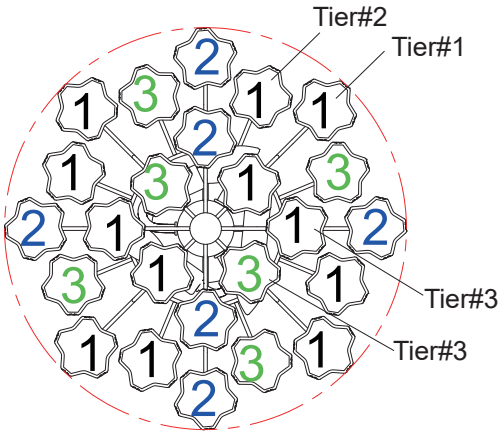

Glass Installation Diagram

Glass Sets

1.	12 pcs	Clear glass(D2.75 x H7.75")
2.	6 pcs	Amber glass(D2.75 x H7.75")
3.	6 pcs	Smoke glass(D2.75 x H7.75")

⚠ WARNING: This product can expose you to Lead which is known to the state of California to cause cancer and/or birth defects or reproductive harm. For more information go to www.P65Warnings.ca.gov

CRYSTORAMA LIGHTING

Crystorama.com

ASSEMBLY INSTRUCTION MODEL# ADD-300-AG-AU

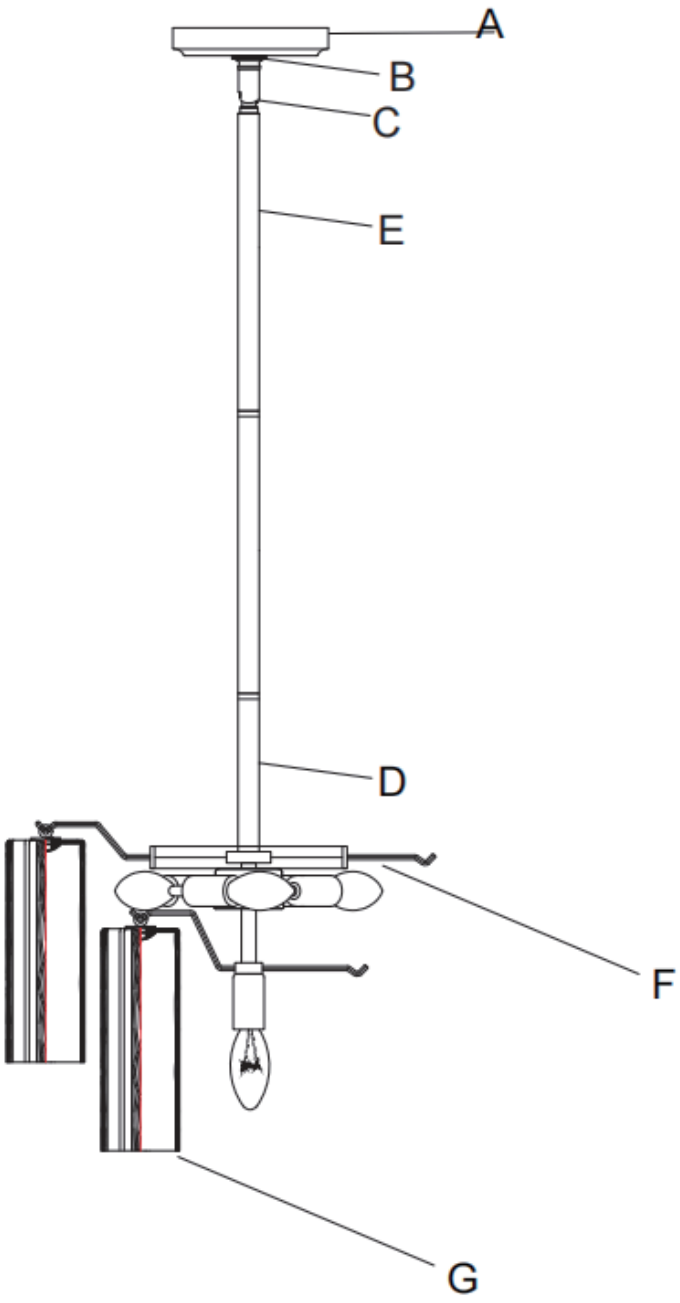

Part Number

Part Numbers

A. (1)-Canopy,D 5.25XH1"
(XBN300AGCAN5.125IN)
(XBN300AGCAN5.125IN_2)
B. (1)-Collar ring
C. (1)-Swivel
D. (1)-6"-D13mm,Rod
(XBN300AGROD6IN)
E. (3)-12"-D13mm,Rods
(XBN300AGROD12IN)
F. (1)-Frame
G.(12)-Clear glass,D2.75" x H7.75"
(XBN300AGCLGLA7.75IN)
(6)-Amber glass,D2.75" x H7.75"
(XBN300AGAMGLA7.75IN)
(6)-Smoke glass,D2.75" x H7.75"
(XBN300AGSMGLA7.75IN)