CRYSTORAMA LIGHTING

Crystorama.com

ASSEMBLY INSTRUCTION MODEL# ADD-319-AG-WH

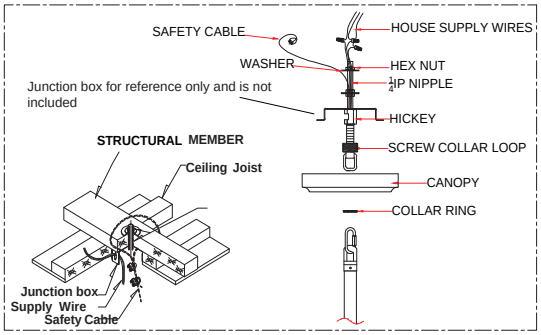

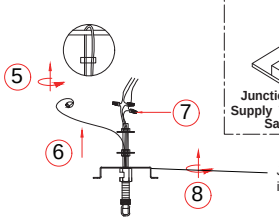

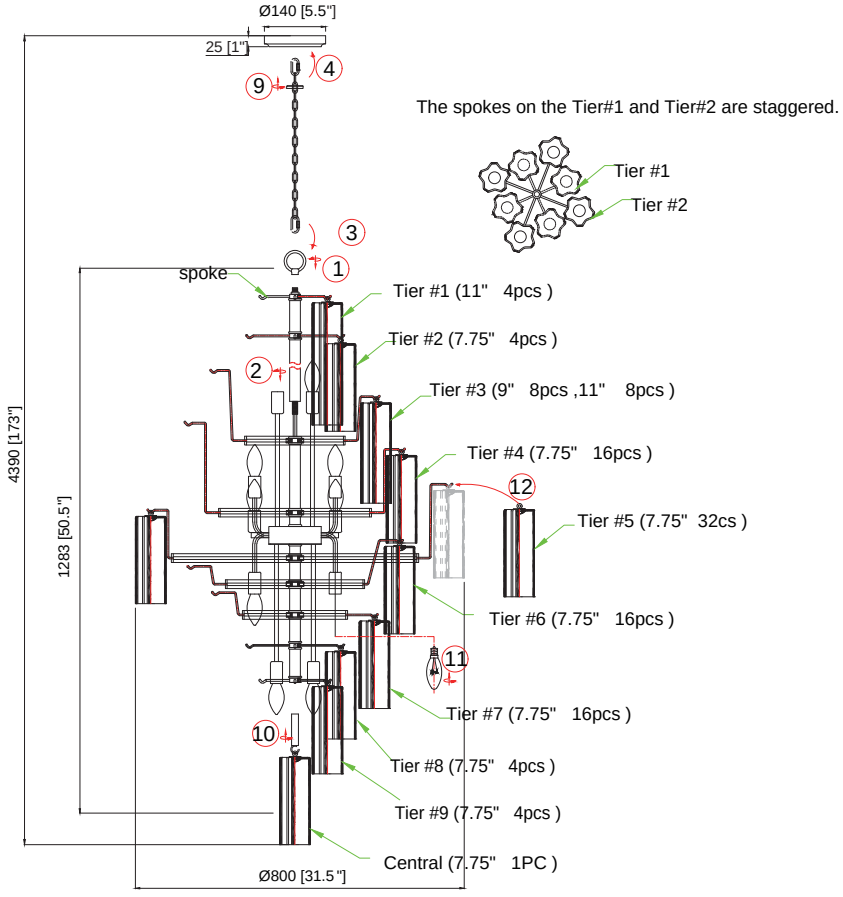

The spokes on the Tier#1 and Tier#2 are staggered.

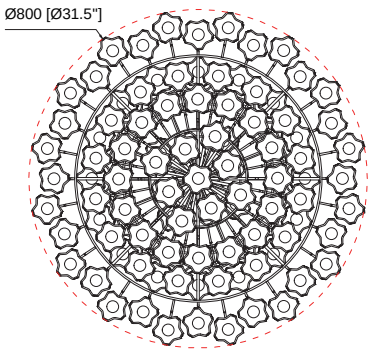

Assemble glass steps:

Tier #1- Tier #2 - Tier #3 - Tier #4 - central -Tier #9 -Tier #8 - Tier #7 -Tier #6 -Tier #5

WARNING:



All electrical components must be installed by a licensed electrician in accordance with the National Electric Code and the appropriate local electrical codes.

Intertek



You will need 20 Candelabra Base Bulb
40 Watts Recommended 60 Watts Max.
USE LED BULBS FOR EXTENDED USE
This fixture is Dry rated

How to Install

1. Decide the preferred hanging height and choose the correct length of chain needed. Screw the loop onto the top stem. Screw the top stem and bottom short stem onto the frame.Please make sure that the spokes on Tier#1 is staggered in between the spokes on Tier #2 as illustrated.
2. Attach one end of the 1/4 IPS threaded pipe provided onto the ceiling joist and secure with hex nut.The other end should protrude through the outlet box as shown.
3. Assemble the screw collar loop,nipple hex nut and hickey to the 1/4 IPS threaded pipe and adjust overall length to allow the collar ring to hold the canopy flush to ceiling
4. Attach one end of the chain to the fixture loop by opening the quick link. Slide the screw collar ring over the upper end of the chain and through the canopy.Open the opposite quick link and lift the fixture to attach the screw collar loop to the quick link.Secure the link.
5. Feed the fixture wires, ground wires and safety cable through the chain and screw collar loop, exiting through the Hickey. Proceed with the wire connections. Wrap the safety cable around the ceiling joist and secure the cable with the clamp and set screws provided as shown.After wires are connected,thread the screw collar loop onto the nipple. Place the canopy up against the ceiling and lock by tightening the screw collar loop ring.
6. After safely attaching fixture into junction box . Install the short stem onto the bottom of the fixture.
7. Install bulbs and proceed to connecting the power.
8. Dress the glass as illustrated.

Glass Sets

1. 93 pcs	White glass (D2.75 x H7.75")
2. 8 pcs	White glass(D2.75 x H9")
3. 12 pcs	White glass(D2.75 x H11")

⚠ WARNING: This product can expose you to Lead which is known to the state of California to cause cancer and/or birth defects or reproductive harm. For more information go to www.P65Warnings.ca.gov

CRYSTORAMA LIGHTING

Crystorama.com

ASSEMBLY INSTRUCTION MODEL# ADD-319-AG-WH

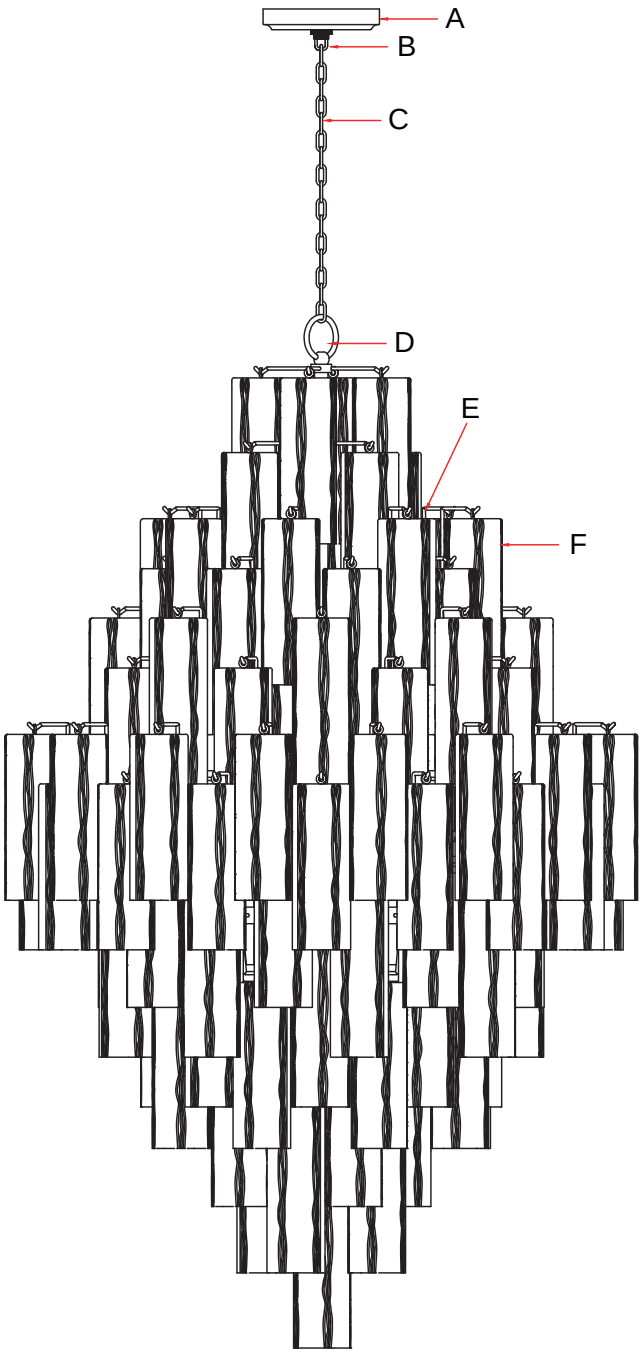

Part Number

Part Numbers

For 100lbs rated outlet box
(1)-Long threaded rod
(1)-Hickey
(1)-Short threaded pipe
(3)-Metal washer
(7)-Hex nut

A.(1)-Canopy D5.5*H1
(XBN319AGCAN5.5IN)
B.(1)-Collar Loop
C.(1)-Chain D6mm*120"
(XBN319AGCHA6MM)
D.(1)-Loop
E.(1)-Frame
F.(93)-White glass D2.75 x H7.75"
(XBN300AGWHGLA7.75IN)
(8)-White glass D2.75 x H 9"
(XBN319AGWHGLA9IN)
(12)-White glass D2.75 x H 11"
(XBN319AGWHGLA11IN)

SAFETY CABLE INSTALLATION INSTRUCTIONS

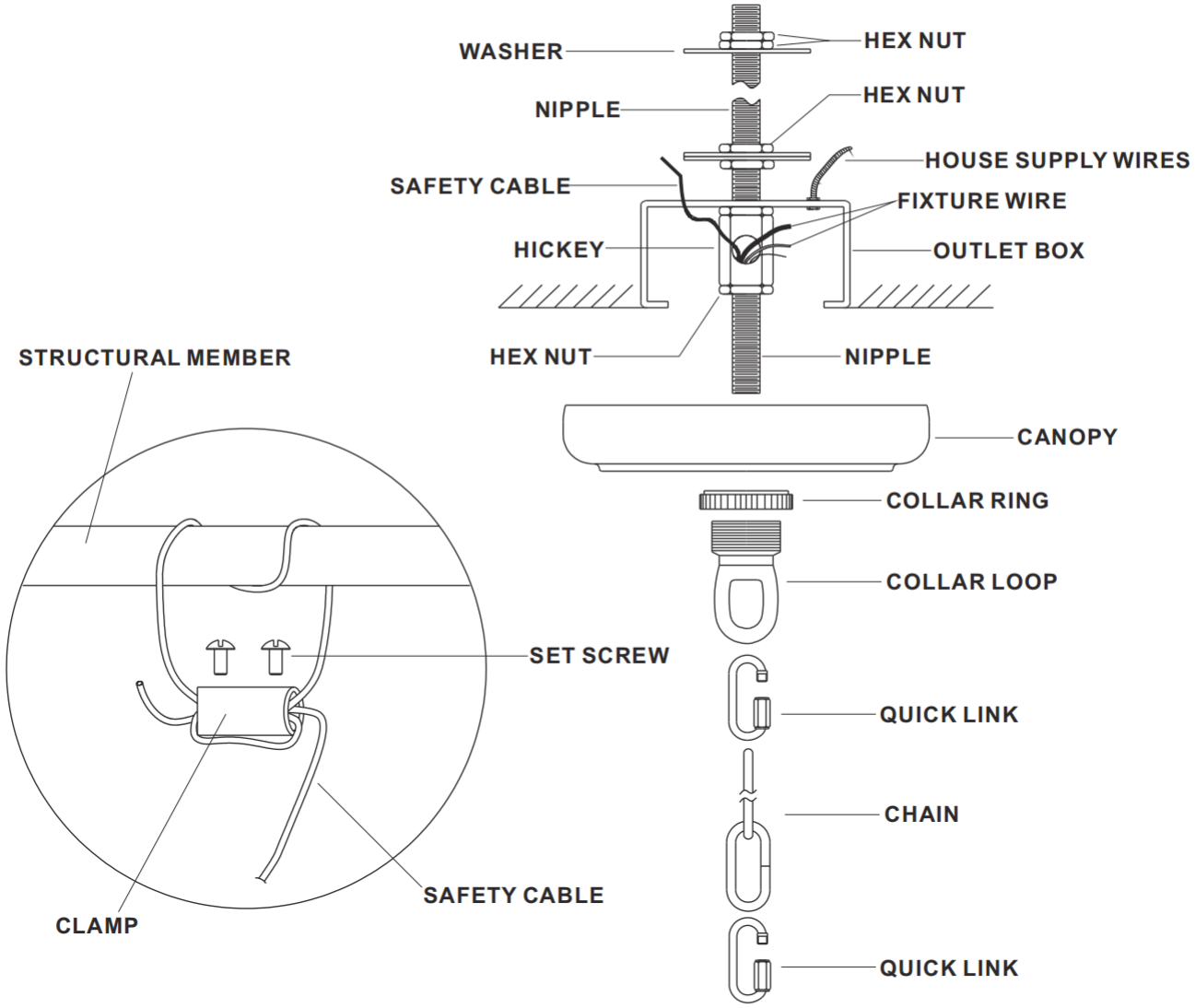

IMPORTANT:
FOR A SAFE AND SECURE INSTALLATION, THESE FIXTURES MUST BE INSTALLED BY MEANS OF SUPPORTS THAT ARE INDEPENDENT OF THE OUTLET BOX.

SUGGESTED INSTALLATION:

1. **Provide a 1/4 IPS pipe with one end securely mounted to a beam or a structural member. The other end should protrude through the center of the outlet, as shown.**
2. **Assemble the screw collar loop, nipple, hex nuts and hickey to center 1/4 IPS support pipe and adjust overall length to allow the collar ring to hold the canopy flush to the ceiling. When the adjustments have been completed secure the hex nut, as shown.**
3. **Use one quick link to connect fixture loop and the bottom of chain. Slide the screw collar ring over the upper end of the chain, through the (Finished side down). Then use another quick link to connect collar loop and the top of chain.**
4. **Lace the fixture wires, ground wires and safety cable through the chain and screw collar loop, exiting through the side of HICKEY. Proceed to attach the FIXTURE GROUND WIRE to HOUSE GROUND WIRE using wire connector. Using wire connectors, connect the HOUSE WHITE WIRE to the FIXTURE SUPPLY WIRE (WHITE OR RIBBED SIDE); connect the HOUSE BLACK (or RED) WIRE to the FIXTURE SUPPLY WIRE (BLACK or SMOOTH SIDE). Wrap all connectors with approved electrical tape. Wrap safety cable around outlet box brace and pull cable taut. Secure cable with the clamp and (2) set screws provided, as shown.**
5. **Push the CANOPY upward over the OUTLET BOX. Be sure that all wires are carefully tucked into the OUTLET BOX cavity. Secure canopy against ceiling by threading CANOPY LOCK RING onto the CANOPY LOOP. Tighten until snug.**