CRYSTORAMA LIGHTING

Crystorama.com

ASSEMBLY INSTRUCTION MODEL# ADD-337-CH-SM

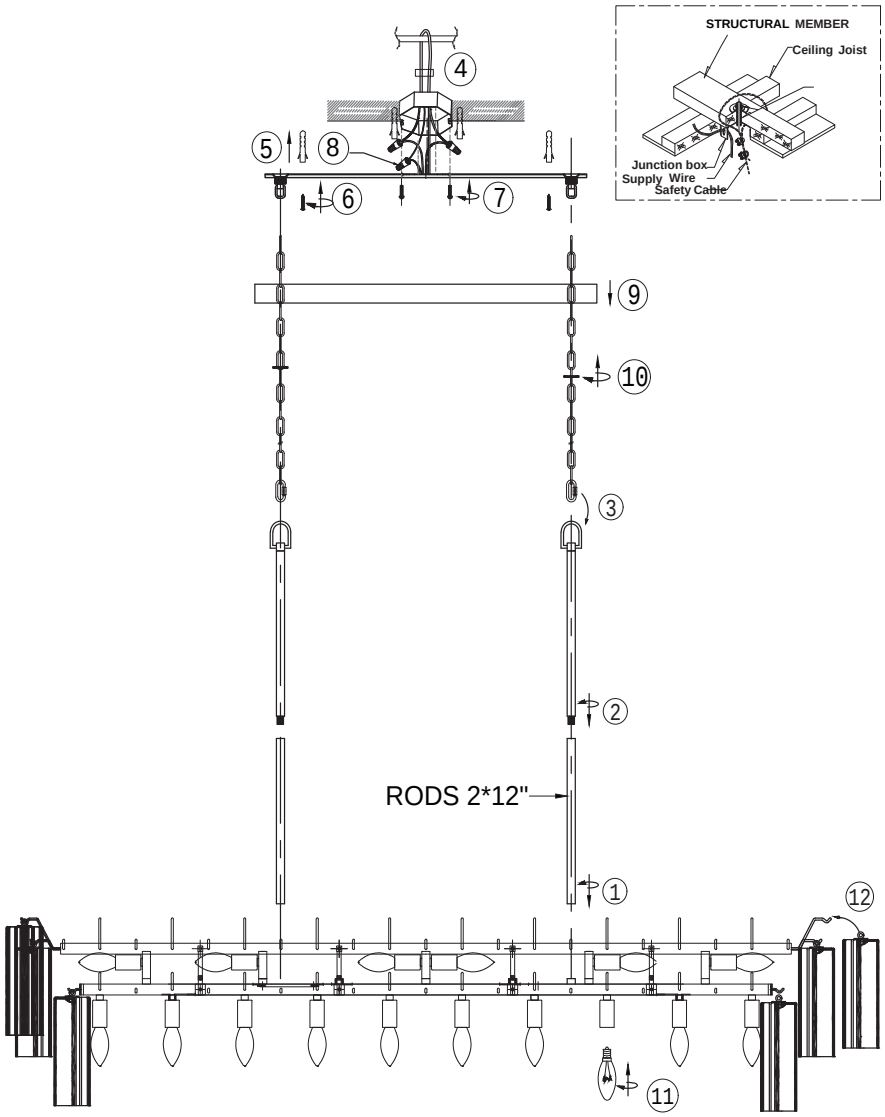

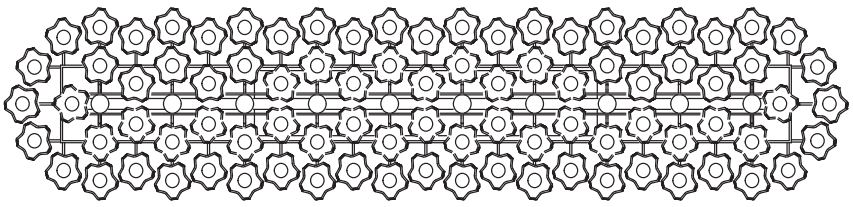

WARNING:

Electrical Danger Turn Power off

All electrical components must be installed by a licensed electrician in accordance with the National Electric Code and the appropriate local electrical codes.

Intertek

You will need 16 Candelabra Base Bulb
40 Watts Recommended 60 Watts Max.
USE LED BULBS FOR EXTENDED USE
This fixture is Dry rated

How to Install

1. Decide the preferred hanging height and choose the correct length of rods and chain needed.

2. Feed the wires through the rods and screw the rods onto the top of the fixture. Attach the quick link on one end of the chain to the top of the rod. Repeat for the other rod using another chain.

3. Place the mounting plate over the outlet box and mark the points on the ceiling at the same distance as between the holes on the mounting plate.

4. Drill the holes at the marked points and insert the plastic anchors into it.

5. Attach the mounting plate onto the outlet box and secure with the anchor screws.

6. Feed the wires and safety cable through the collar loop and hickey on the mounting plate, assemble the collar loop into the hickey.Run the safety cable through the outlet box and wrap the safety cable around the ceiling joist and secure the cable with the clamp and set screws provided as shown. Raise the fixture up to the ceiling and do the wire connections. Put the canopy up against the ceiling and lock by tightening the screw collar loop ring.

7. Install the bulb into the socket.

8. Dress the glass as illustrated.

Glass Sets

1. 88 pcs Smoke Glass(D2.75 x H7.75")

⚠ WARNING: This product can expose you to Lead which is known to the state of California to cause cancer and/or birth defects or reproductive harm. For more information go to www.P65Warnings.ca.gov

CRYSTORAMA LIGHTING

Crystorama.com

ASSEMBLY INSTRUCTION MODEL# ADD-337-CH-SM

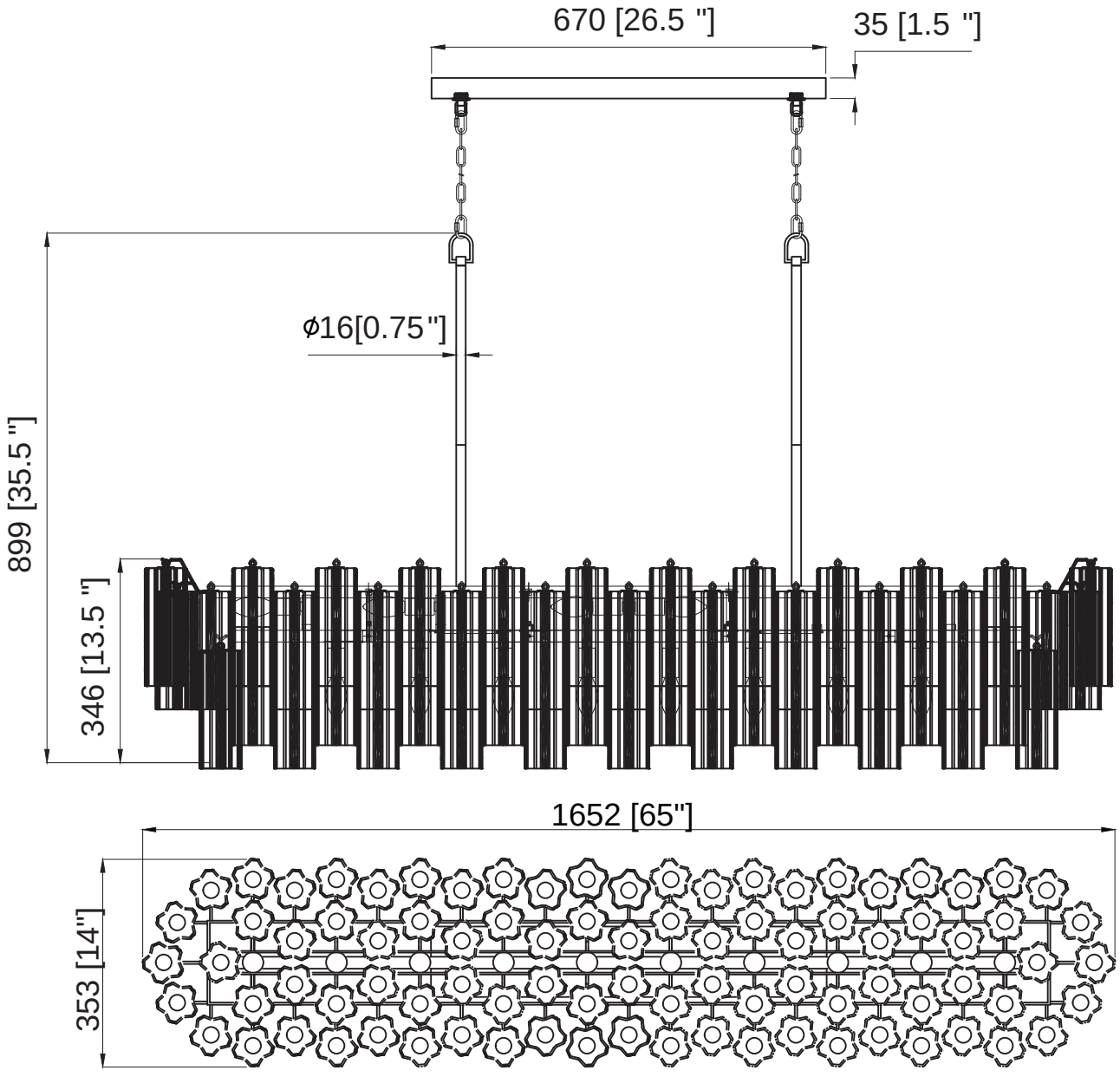

CRYSTORAMA LIGHTING

Crystorama.com

ASSEMBLY INSTRUCTION MODEL# ADD-337-CH-SM

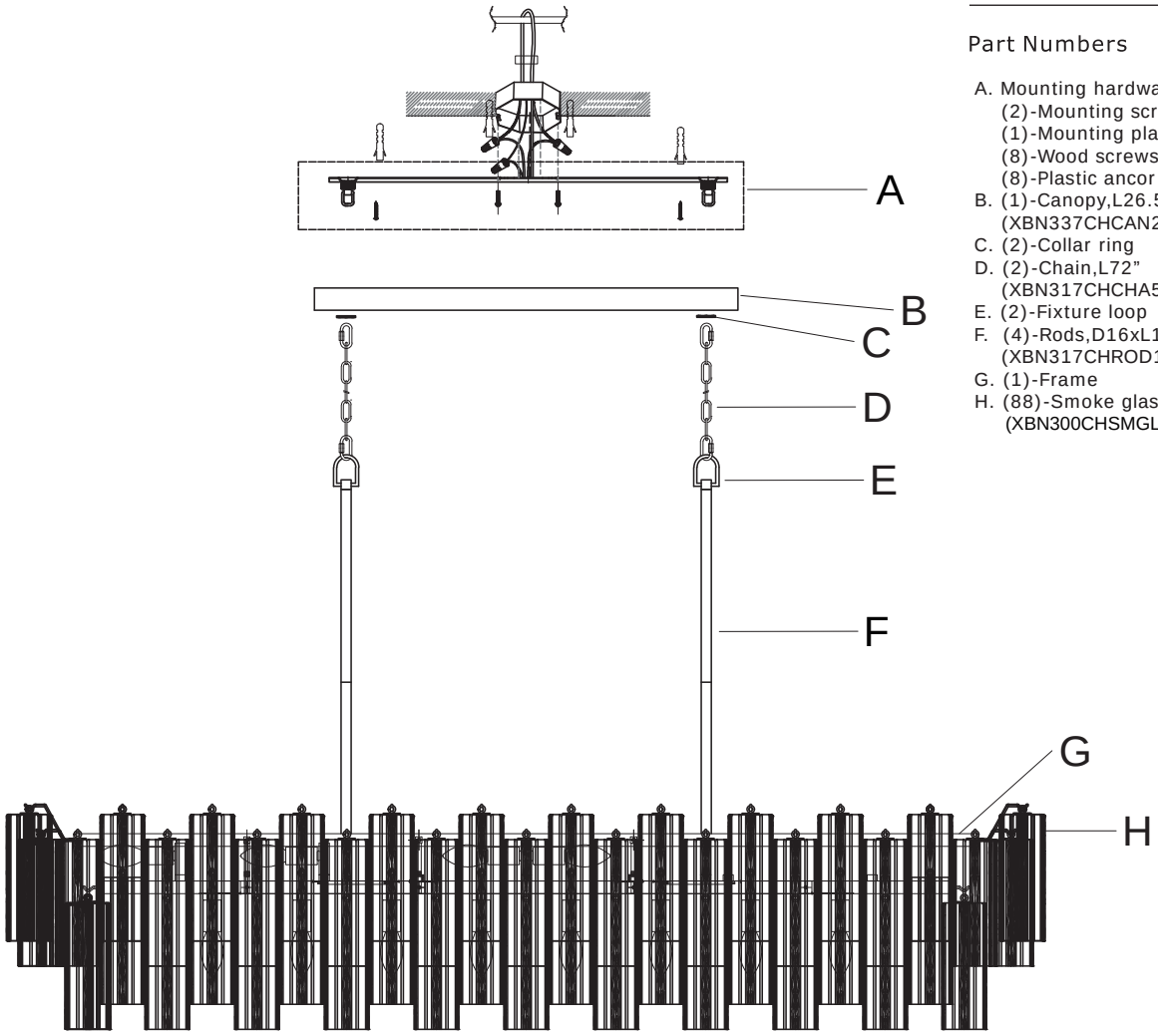

Part Number

Part Numbers

A. Mounting hardware includes
   (2)-Mounting screws
   (1)-Mounting plate
   (8)-Wood screws
   (8)-Plastic ancor
B. (1)-Canopy,L26.5xW4.75”
   (XBN337CHCAN26.5IN)
C. (2)-Collar ring
D. (2)-Chain,L72”
   (XBN317CHCHA5MM)
E. (2)-Fixture loop
F. (4)-Rods,D16xL12”
   (XBN317CHROD12IN)
G. (1)-Frame
H. (88)-Smoke glass,D2.75 x H7.75"
   (XBN300CHSMGLA7.75IN)