CRYSTORAMA LIGHTING

Crystorama.com

ASSEMBLY INSTRUCTION MODEL#FUL-911-GA-CL

The fixture can be mounted both downwards and upwards

FRONT VIEW

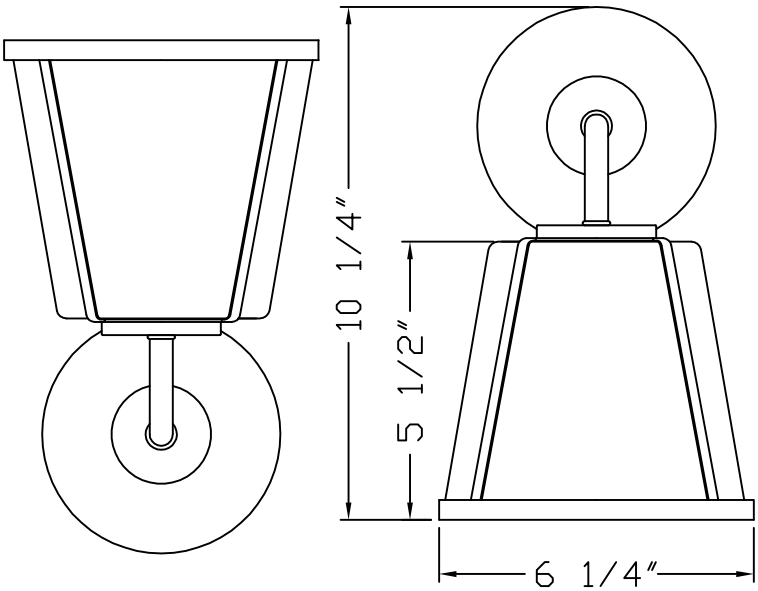

Includes the metal frame. Glass shade is 6"

SIDE VIEW

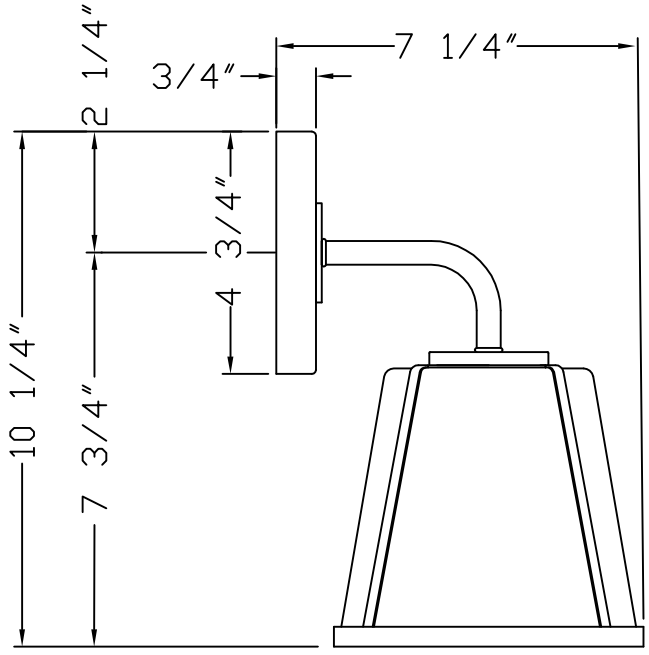

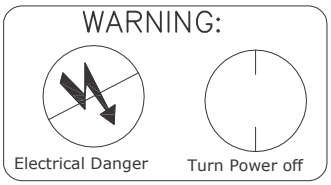

All electrical components must be installed by a licensed electrician in accordance with the National Electric Code and the appropriate local electrical codes.

Intertek



You will need 1- Medium Base Bulb
60 Watts Recommended 100 Watts Max.
USE LED BULBS FOR EXTENDED USE
THE FIXTURE IS DAMP RATED

How to install

1. Install the mounting plate to the outlet box using two outlet box screws.
2. Install backplate onto the mounting plate, and secure with the screws.
3. Install the Glass shade onto the socket and secure with socket ring.
4. Install the bulb(not included) into the socket.

⚠ WARNING: This product can expose you to Lead which is known to the state of California to cause cancer and/or birth defects or reproductive harm. For more information go to www.P65Warnings.ca.gov

CRYSTORAMA LIGHTING

Crystorama.com

PART NUMBER MODEL#FUL-911-GA-CL

Part Number

Part Numbers

A. (1)-Mounting hardware
B. (1)-Mounting plate
C. (1)-Backplate W4-3/4''xH3/4''(XAR911GABKP4.75IN)
D. (2)-Screw
E. (1)-Socket ring 2-1/4" (XAR911RING)
F. (1)-Clear Glass shade 6"(XAR911CLSHA6IN)

