# CRYSTORAMA LIGHTING

Crystorama.com

**ASSEMBLY INSTRUCTION** MODEL #HAY-1413-PN

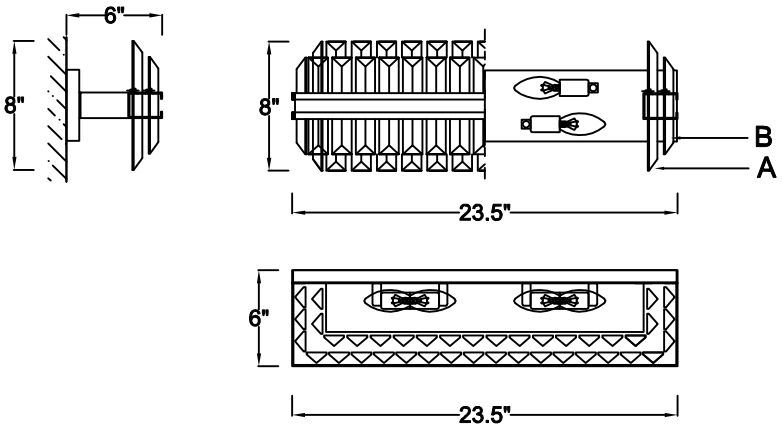





**All electrical components must be installed by a licensed electrician in accordance with the National Electric Code and the appropriate local electrical codes.**

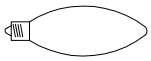

**You will need 4-Candelabra Base Bulb**

**40 Watts Recommended 60 Watts Max**

**USE LED BULBS FOR EXTENDED USE**

**This fixture is Damp rated**

## How to Install

1. Place the mounting plate over the outlet box and mark 6 points on the wall with the same distance as the holes on the mounting plate.
2. Drill the holes at the marked points and insert the plastic anchors into the wall. Put the mounting plate back over the outlet box and secure with the anchor screws.
3. Place the frame over the mounting plate and secure with the screws.
4. Install the crystal rods onto the frame.

## DETAILED ILLUSTRATION

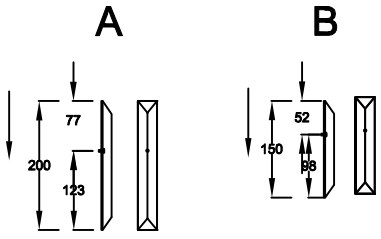


## Crystal Sets

A. 18Sets. (1)30x200mm

B. 22Sets. (1)30x150mm

When dressing the crystals, install the crystal so the shorter end faces toward the ceiling.

⚠ WARNING: This product can expose you to Lead, which is known to the State of California to cause cancer and/or birth defects or reproductive harm. For more information go to www.P65Warnings.ca.gov

CRYSTORAMA LIGHTING

Crystorama.com

**PART NUMBER** MODEL #HAY-1413-PN

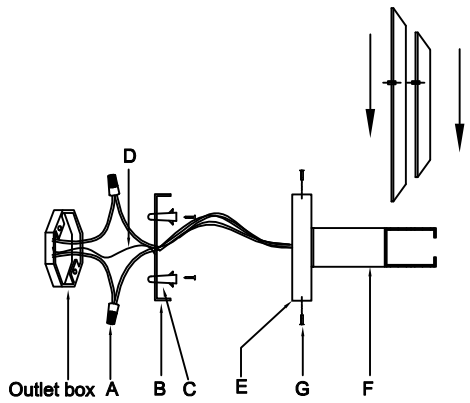


## Part Number

### Part Numbers

A. (2)-Wire Connector
B. (1)-Mounting Plate
C. (6)-Plastic anchors and screws
D. (1)-Ground Wire
E. (1)-Backplate; w23.5" x 4.25" x h0.75" (XFB1413PNBKP23.5IN)
F. (1)-Frame
G. (4)-Screws

PART BAG Ⅰ: Includes Parts A, C

