CRYSTORAMA LIGHTING

Crystorama.com

ASSEMBLY INSTRUCTION MODEL#JUN-10322-BF

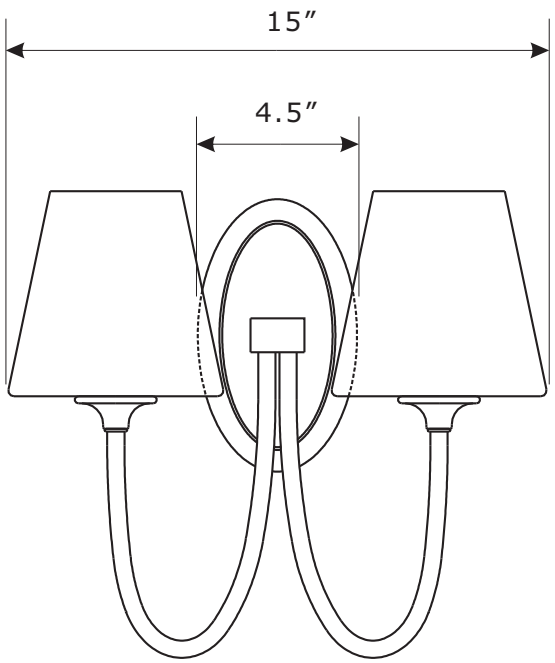

FRONT VIEW

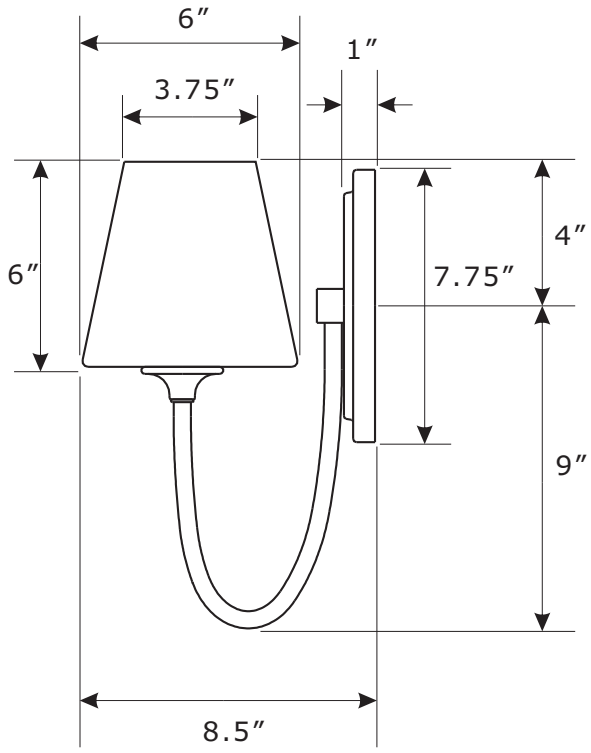

SIDE VIEW

WARNING:



Electrical Danger



Turn Power off

All electrical components must be installed by a licensed electrician in accordance with the National Electric Code and the appropriate local electrical codes.

CERTIFIED



You will need 2- Medium Base Bulb
60 Watts Recommended 100 Watts Max.
USE LED BULBS FOR EXTENDED USE
This fixture is Damp rated

How to install

1. Install the mounting plate to the outlet box using two outlet box screws.
2. Install backplate onto the mounting plate, and secure with the screws.
3. Install the glass shade over the socket, and secure with the socket ring .
4. Install the bulb(not included) into the socket.

WARNING: This product can expose you to Lead which is known to the state of California to cause cancer and/or birth defects or reproductive harm. For more information go to www.P65Warnings.ca.gov

CRYSTORAMA LIGHTING

Crystorama.com

ASSEMBLY INSTRUCTION MODEL#JUN-10322-BF

Part Number

Part Numbers

A. (1)-Mounting hardware
B. (1)-Mounting plate
C. (1)-Backplate L7-5/8''xW4-3/8''xH7/8'' #XRF10322BFBKP7.625IN
D. (2)-Screw
E. (2)-Socket
F. (2)-Glass shade #XRF10321SHA6IN
G. (2)-Socket ring

